IOPscience iopscience.iop.org

Home Search Collections Journals About Contact us My IOPscience

Electronic structure of Mg, Zn and Cd

This article has been downloaded from IOPscience. Please scroll down to see the full text article.

1989 J. Phys.: Condens. Matter 1 8397

(http://iopscience.iop.org/0953-8984/1/44/011)

View the table of contents for this issue, or go to the journal homepage for more

Download details:
IP Address: 171.66.16.96
The article was downloaded on 10/05/2010 at 20:47

Please note that terms and conditions apply.

J. Phys.: Condens. Matter 1 (1989) 8397–8406. Printed in the UK

Electronic structure of Mg, Zn and Cd

S Daniuk†, T Jarlborg‡, G Kontrym-Sznajd†, J Majsnerowski† and H Stachowiak†

† Institute of Low Temperature and Structure Research, Polish Academy of Sciences, PO Box 937, 50-950 Wroclaw, Poland

‡ Department of Physics, University of Geneva, CH-1211 Geneva, Switzerland

Received 17 January 1989, in final form 21 April 1989

Abstract. Electronic structures for Mg, Zn and Cd have been completed using the linear muffin tin orbital method. The results include plots of band structures, Fermi surfaces in extended and reduced zone schemes and density-of-states functions. Generally, good agreement with some other *ab initio* band results as well as with experiment is found for the Fermi surface dimensions except for an absence of needles in Zn.

For the d bands, it is found that in Zn they are localised above the conduction-band minimum, while in Cd they lie only partially above the conduction band.

1. Introduction

In this paper we present the band structure, the Fermi surface (FS) in extended and reduced zone schemes and the density-of-states (DOS) functions for Mg, Zn and Cd.

The divalent hexagonal close packed (HCP) metals mentioned above are a useful basis for the illustration of some of the fundamental concepts of one-electron band theory. They are, on the one hand, relatively simple metals in which the detailed form of the s-electron conduction bands is largely determined by the crystal symmetry and lattice parameters, almost completely independent of the low lying p bands in Mg and relatively independent (e.g. in comparison with typical transition metals) by d bands in Zn and Cd. Nevertheless, on the other hand, the large variation in the axial ratio c/a between the near ideal in Mg and the far from ideal in Zn and Cd (see table 1) makes for interesting differences in details of their electronic structure and especially in relative dimensions of various elements of FS.

Especially in the case of Cd c/a is so much greater than $\sqrt{8/3}$ ($=1.633$) that the vertical electron elements (needles) of FS in the third band at point K of the Brillouin zone do not exist even in the free-electron model. The free-electron FS for a divalent HCP metal with ideal ratio c/a is shown in various papers (e.g. Harrison 1962) and it contains the following elements: first zone hole pocket around H (cap), second zone hole (monster), third zone electrons around Γ (lens), around L (butterfly), around K (needles) and fourth zone electron pockets around L. The critical value of c/a at which these needles disappear is 1.861 which is smaller than the actual value of c/a for Cd which is 1.862 (Stark and Falicov 1967, Jones *et al* 1968). For Zn c/a is less than for Cd and is obtained to be about 1.828 (Stark and Falicov 1967, Trivisonno and Stark 1978,

Table 1. Some parameters used in the calculations (in au).

	Mg	Zn	Cd
Lattice constants a	6.026	5.026	5.610
c	9.781	9.188	10.443
c/a	1.623	1.828	1.862
Wigner–Seitz sphere radius	3.324	2.884	3.239

Daniuk 1983); this is less than the critical value so that in the free-electron model these needles survive in Zn.

Extensive studies of the electronic structure of Mg, Zn and Cd have been made. The theoretical (e.g. Harrison 1962 (Zn), Stark and Falicov 1967 (Zn, Cd), Borghese and Denti 1971 (Zn, Cd), 1974 (Zn), Chatterjee and Sinha 1975 (Mg), Asokamani *et al* 1978 (Mg), Daniuk 1983 (Zn)) and experimental (e.g. Joseph and Gordon 1962 (Zn), Daniel and Mackinnon 1963 (Cd), Gibbons and Falicov 1963 (Zn, Cd), Stark 1967 (Mg), Ketterson and Stark 1967 (Mg), Kimball *et al* 1967 (Mg), Trivisonno and Stark 1967 (Mg, Zn, Cd), Jones *et al* 1968 (Cd), Steenhaut and Goodrich 1970 (Zn), Almond *et al* 1975 (Mg, Zn, Cd)) results do not agree with each other even qualitatively (especially regarding elements of the FS around L (Zn and Cd) and needles in the case of Zn). There are also some quantitative discrepancies regarding some dimensions of the various pieces of the FS even in the case of such a simple metal as Mg (see e.g. the results obtained by Asokamani *et al* 1978).

The next problem connected with the electronic structure of Zn and Cd concerns the position of tightly bound d states. A number of authors (Auluck 1976 (Zn), Borghese and Denti 1971 (Zn, Cd), Harrison 1962 (Zn), Mattheiss 1964 (Zn), Stark and Falicov 1967 (Zn)) concluded that the d bands in these metals lie below the conduction-band minimum and that their band structure, as in the case of simple metals, may be very well described by the pseudopotential model. Nevertheless, on the other hand, some other authors (Borghese and Denti 1974 (Zn), Daniuk 1983 (Zn), Juras *et al* 1972 (Zn), Moruzzi *et al* 1978 (Zn, Cd), Nilsson and Lindau 1971 (Zn)) obtained d bands in Zn and Cd above or very close to the conduction-band minimum and consequently they treat these metals rather like transition metals. This problem is very important in the inter-

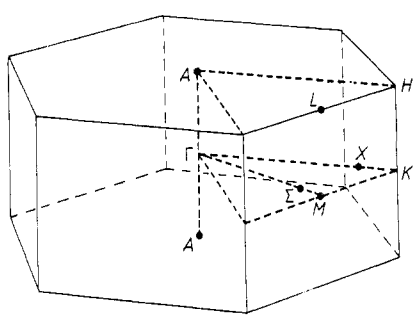

Figure 1. Brillouin zone for HCP structure.

pretation of some experimental data, e.g. angular correlation of positron annihilation radiation, Compton profiles, etc.

The hexagonal Brillouin zone with the symmetry points is shown in figure 1. Σ and X denote the points on the border of the second zone on the ΓMK plane (compare this with figure 5 where the FS in the extended zone scheme is drawn). Calculation of the electronic structure along the ΣL line is very important if one wants to obtain dimensions of butterflies with high precision (experiments devote a lot of attention to this problem; see, e.g., figure 12 of Ketterson and Stark (1967)). However, this line is usually not taken into account in band structure calculations. The present situation can be summarised as follows.

(i) According to our knowledge there exist only three theoretical papers on the electronic structure of Cd in which quite large approximations are introduced (only in one paper by Moruzzi *et al* (1978), where Cd was treated as an FCC metal, were d bands taken into account).

(ii) There are still controversies concerning needles in Zn (see, e.g., Steenhaut and Goodrich 1970).

(iii) There is no theoretical information on FS dimensions along the $L\Sigma$ line for Mg (except those by Kimball *et al* (1967)). This line is important if one wants to obtain the FS dimensions in the second zone when this surface does not reach the Σ point and for the description of butterflies which are accurately measured in experiment (Ketterson and Stark 1967). The other line important for divalent HCP metals is ΣX (see figure 5*b*). If the FS sticks to the Σ point, the determination of it on the ΓMK plane needs calculations along this line.

From the above it is apparent that more complete band-structure calculations for Mg, Zn and Cd from first principles are needed in order to investigate them adequately.

2. Outline of the method

Our study of the electronic structure of Mg, Zn and Cd is based on self-consistent band-structure calculations, using the linear muffin tin orbital (LMTO) method originally proposed by Andersen (1975). The linear methods have been shown to be a very efficient scheme for determining the electronic band structure (Jarlborg and Arbman 1976, Jepsen *et al* 1975, Skriver 1984). They are designed for optimal computational efficiency at the expense of a slight numerical inaccuracy compared to other *ab initio* methods. The resulting band energies and wavefunctions have proven useful in the interpretation of various physical properties. Since they have been described in detail elsewhere we will only state their main features.

This method uses a spherically symmetric potential in the geometry of an overlapping Wigner–Seitz sphere, which works especially well in closely packed structure where the interstitial volume is small compared to that of the muffin tin. The basis set is corrected for the overlapping sphere geometry by including the 'combined correction terms'. The wavefunctions for the valence states are calculated semirelativistically including all relativistic terms except the spin–orbit coupling terms (Koelling and Harmon 1977). The local density functional theory of Hedin *et al* (1971) is used to determine the exchange and correlation contribution to the potential.

Some of the parameters used in the calculations are given in table 1.

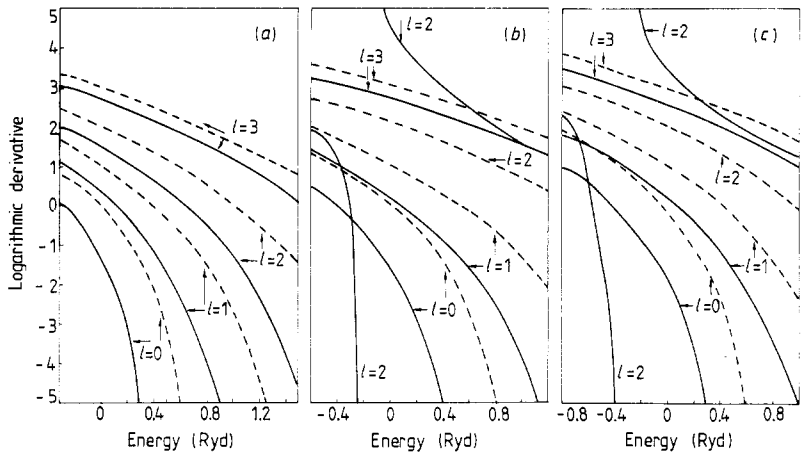

Figure 2. Logarithmic derivatives of the radial wavefunctions (solid line) as compared with the free electron values (broken curves), as functions of the energy for (*a*) Mg, (*b*) Zn, (*c*) Cd.

3. Results and discussion

It is known (Loucks 1967, Skriver 1984, Slater 1965) that the analysis of the logarithmic derivative of the radial wavefunction of the electron at the Wigner–Seitz sphere

$$D_l(E) = \frac{S}{R_l(E,S)} \frac{\partial R_l(E,r)}{\partial r}\bigg|_{r=S}$$

as a function of the energy gives very useful information about the band structure of a given metal. The Wigner–Seitz rule states (see, e.g., Skriver 1984) that an l band can be formed in the energy range where the logarithmic derivative is negative. Usually, the bottom (E_B), the centre (E_C) and the top (E_T) of an l band are defined as follows:

$$D_l(E_B) = 0 \qquad D_l(E_C) = -l-1 \qquad D_l(E_T) = -\infty.$$

The logarithmic derivatives for Mg, Zn and Cd are shown in figure 2 and compared with the free-electron results. In this special case the logarithmic derivative can be found analytically in terms of spherical Bessel functions:

$$D_l(E) = \frac{\sqrt{E}S}{j_l(\sqrt{E}S)} \frac{\partial j_l(\sqrt{E}r)}{\partial r}\bigg|_{r=S}$$

The logarithmic derivatives for Mg differ very little from the free-electron values. There is an energy shift which is due to the difference of zero energy in the case of the spherical Bessel functions and of the actual crystal potential. These energy shifts are similar for the s, p and d bands and are of no real importance. In Zn and Cd the logarithmic derivatives of s and p bands are very similar to those of free-electron values, as in the case of Mg. But for d bands there is a completely different behaviour of the logarithmic derivatives compared with the free-electron values. Near E_F the d content in the bands is quite small, and around E_F (but not at lower energies) the energy bands resemble the free-electron bands.

From figure 2 we can see that in the case of Zn the centre of the d bands lies above the conduction-band minimum. In the case of Cd the centre of the d band lies a little

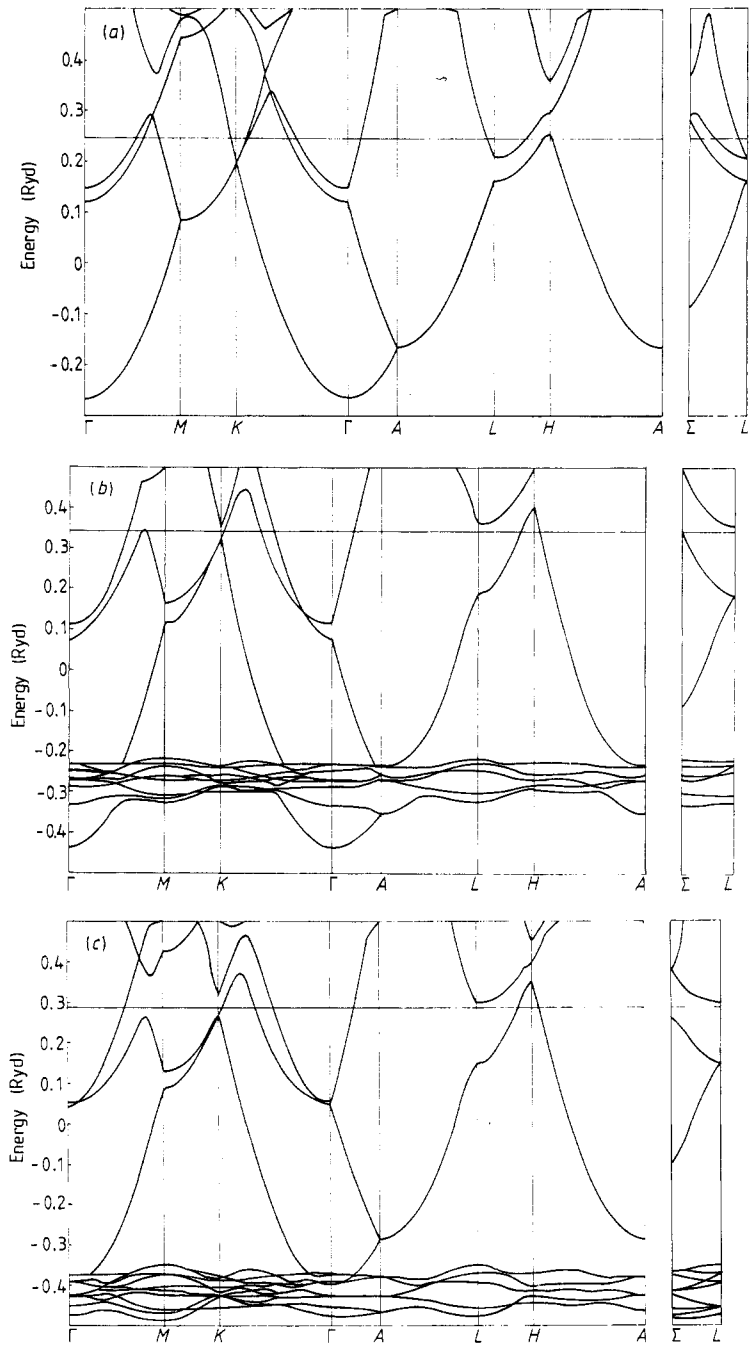

Figure 3. The band structure along the symmetry directions in the Brillouin zone for (*a*) Mg, (*b*) Zn, (*c*) Cd.

below, but is very close to, the conduction-band minimum. Nevertheless, the top of the d bands lies in the conduction-band region. Let us mention that we also performed non-self-consistent LAPW calculations for Cd (as in the paper by Daniuk (1983) for Zn) and

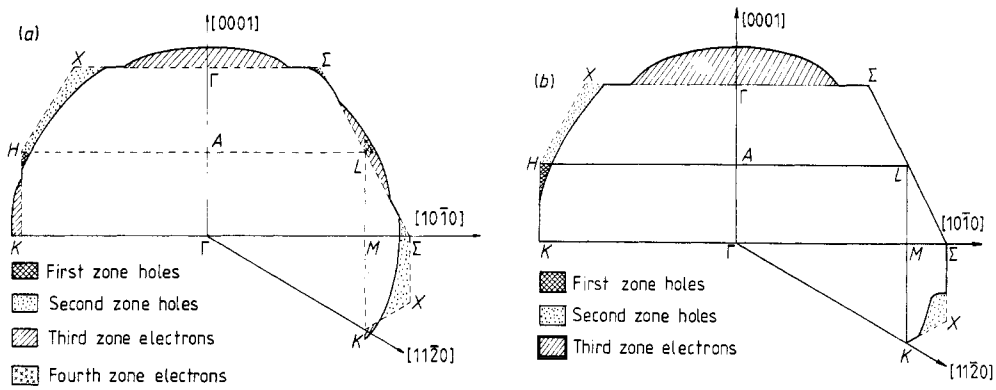

Figure 4. The Fermi surface in the extended zone scheme for (*a*) Mg, (*b*) Cd.

d bands were obtained considerably above the conduction-band minimum. This shows that self-consistent calculations are needed if one wants to obtain a proper description of d bands.

In figure 3 we present a more complete set of band-structure results for Mg, Zn and Cd along the symmetry directions in the Brillouin zone (see figure 1).

On the base of the computed band structure (also in general points of the Brillouin zone) we obtained the corresponding FS in the extended and reduced zone schemes shown in figures 4 and 5 respectively. (We do not present results of the FS for Zn because in the scale of the figures presented they are qualitatively the same as for Cd, except for very small holes around Σ existing in Zn.)

In the case of Mg results presented in figures 2–5 are similar to the corresponding results obtained in the free-electron model, i.e. the FS consists of all elements which follow from structure analysis for the ideal ratio c/a. Of course the quantitative dimensions of the various elements of the FS (given in table 2) differ from those for the free electron model. The holes in first and second bands are considerably reduced at the expense of the reduction of butterflies and fourth zone electron pockets. This is clearly shown in figure 4(*a*) and is in quantitative agreement with the experimental results of Trivisonno and Stark (1978). From the geometric resonance in the ultrasonic attenuation, Ketterson and Stark (1967) obtained the dimension of butterflies along the $L\Sigma$ line equal to 0.206 ± 0.016 au. This is in very good agreement with our result (0.200 au). Performing band-structure calculations along a line parallel to ΓM, at a distance of 0.226 au from it, we obtained k_F equal to 0.5175 and 0.592 in comparison with 0.5126 and 0.5968 for free electrons. This leads to a shape of butterfly similar to the one drawn in figure 12 of the paper by Ketterson and Stark (1967). However, in our case the reduction along the LM line is minimal, making their arms more symmetric with regard to the $L\Sigma$ line than follows from Ketterson and Stark's figure 12. In studying the fourth zone electron pockets, we did not obtain any difference between them and the butterflies along the AL line (only a very small difference between them and the butterflies along the LM one). This may be due to the fact that spin–orbit coupling was neglected in our calculations.

In contrast to the case of Mg there is quite a strong repulsive d-like interaction in both Zn and Cd due to the 3d and 4d states, respectively. That is why their band structures are less reminiscent of the corresponding free-electron ones.

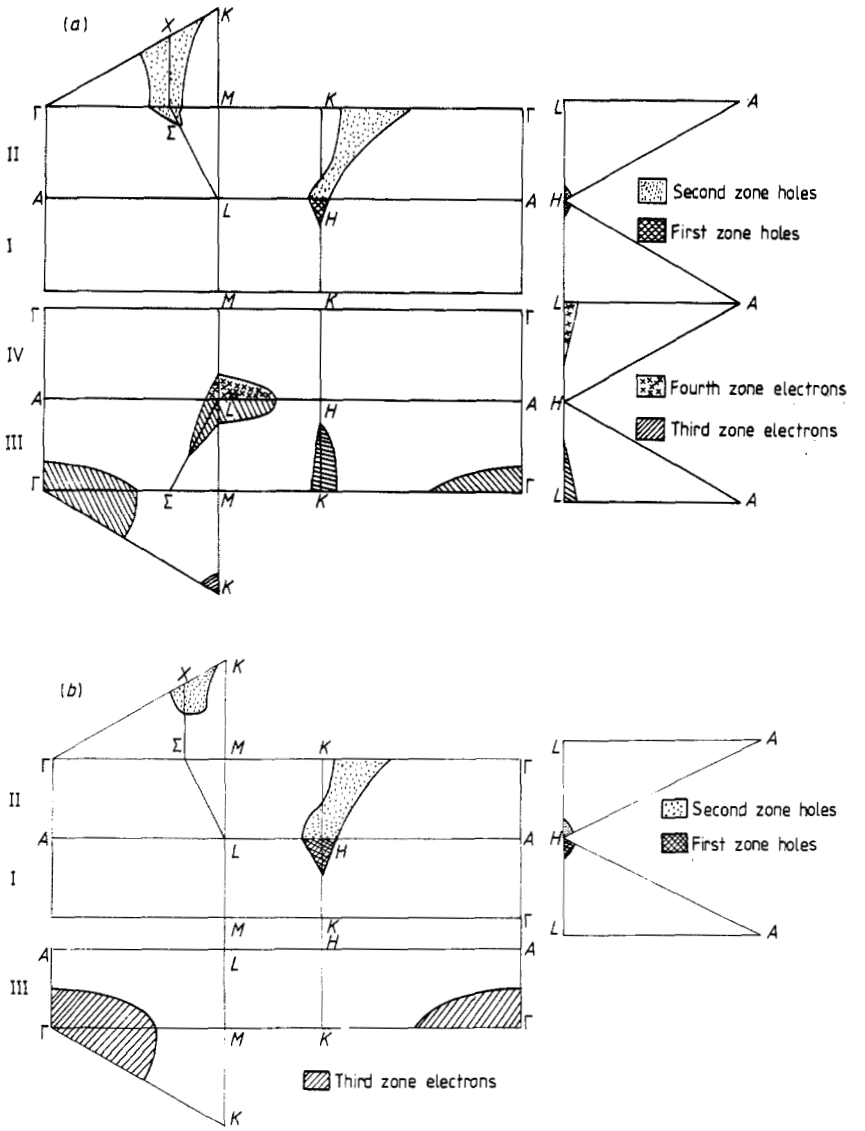

Figure 5. The Fermi surface in the reduced zone scheme for (*a*) Mg, (*b*) Cd.

In both Zn and Cd there are definitely no electron states in the third and fourth zones around the point *L*. Such elements appeared in the free-electron model and are predicted in some previous calculations as well as from the interpretation of some experiments (Cracknell 1971, Dimmock 1971). However, since 1968 it has been believed that they do not exist. Quantitative results for the FS dimensions for Zn and Cd are given in table 2.

As concerns the FS of Zn the presence of the needles around the *K* point in the third band is controversial. They were obtained by Daniuk (1983) (although they were too small for him to estimate their dimensions) but they are absent in present calculations. The bands connected with them lie considerably above the Fermi level (i.e. about 0.02 Ryd).

Table 2. Fermi surface dimensions (in au^{-1}): (1) first band holes; (2) second band monster; (3a) third band needles; (3b) third band butterflies; (3c) third band lens; (4) fourth band cygars.

		Mg			Zn			Cd		
		free	exp†	LMTO	free	exp‡	LMTO	free	exp§	LMTO
(1)	HA	0.042	—	0.029	0.068	0.147	0.066	0.063	0.057	0.050
	HL	0.096	—	0.039	0.162	0.146	0.099	0.153	0.094	0.078
	HK	0.107	—	0.071	0.251	—	0.257	0.301	—	0.135
(2)	ΣL	0.112	0.064	0.063	0.123	—	absent	0.111	absent	absent
	HA	0.142	—	0.029	0.068	0.057	0.066	0.063	0.059	0.050
	HL	0.096	—	0.039	0.162	0.151	0.099	0.153	0.102	0.078
	ΓM_{in}	0.341	0.370	0.369	0.485	0.543	$\leqslant\Gamma\Sigma$	0.442	—	—
	ΓK_{in}	0.341	0.370	0.369	0.485	0.518	0.531	0.442	0.486	0.516
	ΓM_{out}	0.477	0.476	0.469	0.605	—	$\geqslant\Gamma\Sigma$	0.547	—	—
	ΓK_{out}	0.634	0.622	0.621	0.824	0.819	0.822	0.747	—	0.710
(3a)	$K\Gamma$	0.061	0.067	0.062	0.010	—	absent	absent	absent	absent
	KM	0.032	0.033	0.036	0.005	—	absent	absent	absent	absent
(3b)	$L\Sigma$	0.252	0.206	0.200	0.255	absent	absent	0.221	absent	absent
	LH	0.252	0.184	0.200	0.255	absent	absent	0.221	absent	absent
	LM	0.087	—	0.082	0.085	absent	absent	0.072	absent	absent
	LA	0.051	—	0.047	0.044	absent	absent	0.037	absent	absent
(3c)	ΓA	0.085	0.080	0.084	0.155	0.147	0.145	0.145	0.146	0.149
	ΓM	0.341	0.312	0.320	0.485	0.460	0.441	0.442	0.413	0.389
	ΓK	0.341	0.312	0.320	0.485	0.460	0.435	0.442	0.413	0.402
(4)	LA	0.051	—	0.047	0.044	absent	absent	0.037	absent	absent
	LM	0.087	0.043	0.080	0.085	absent	absent	0.072	absent	absent
	LH	0.252	—	0.198	0.255	absent	absent	0.221	absent	absent

† Ketterson and Stark (1967)
‡ Steenhaut and Goodrich (1979)
§ Jones *et al* (1968)

Comparing qualitatively the results obtained by the LAPW method (Daniuk 1983) and our LMTO results, the distortion of the FS from sphericity is stronger for the LMTO calculations: the lenses in the third zone around the point Γ_x are smaller and there are smaller hole surfaces in the first and second Brillouin zones respectively. The FS of Zn is qualitatively similar to the one obtained for Cd. The only difference in comparison with Cd is the presence, in Zn, of the hole around the point Σ. This hole, clearly observed by Trivisonno and Stark (1978), is very small and cannot be visible in the scale of figures 4(*b*) and 5(*b*).

In the case of Cd the results obtained by the LAPW and LMTO methods are qualitatively the same for FS dimensions. The Σ point in the second Brillouin zone is occupied and this is in agreement with the experimental data of Trivisonno and Stark (1978). On the plane ΓMK this causes the hole surface of the monster, being a continuous surface in the free electron model, split into six hole surfaces around the points denoted in figure 1 as X. Quantitative differences for Cd between the LAPW and LMTO methods are similar

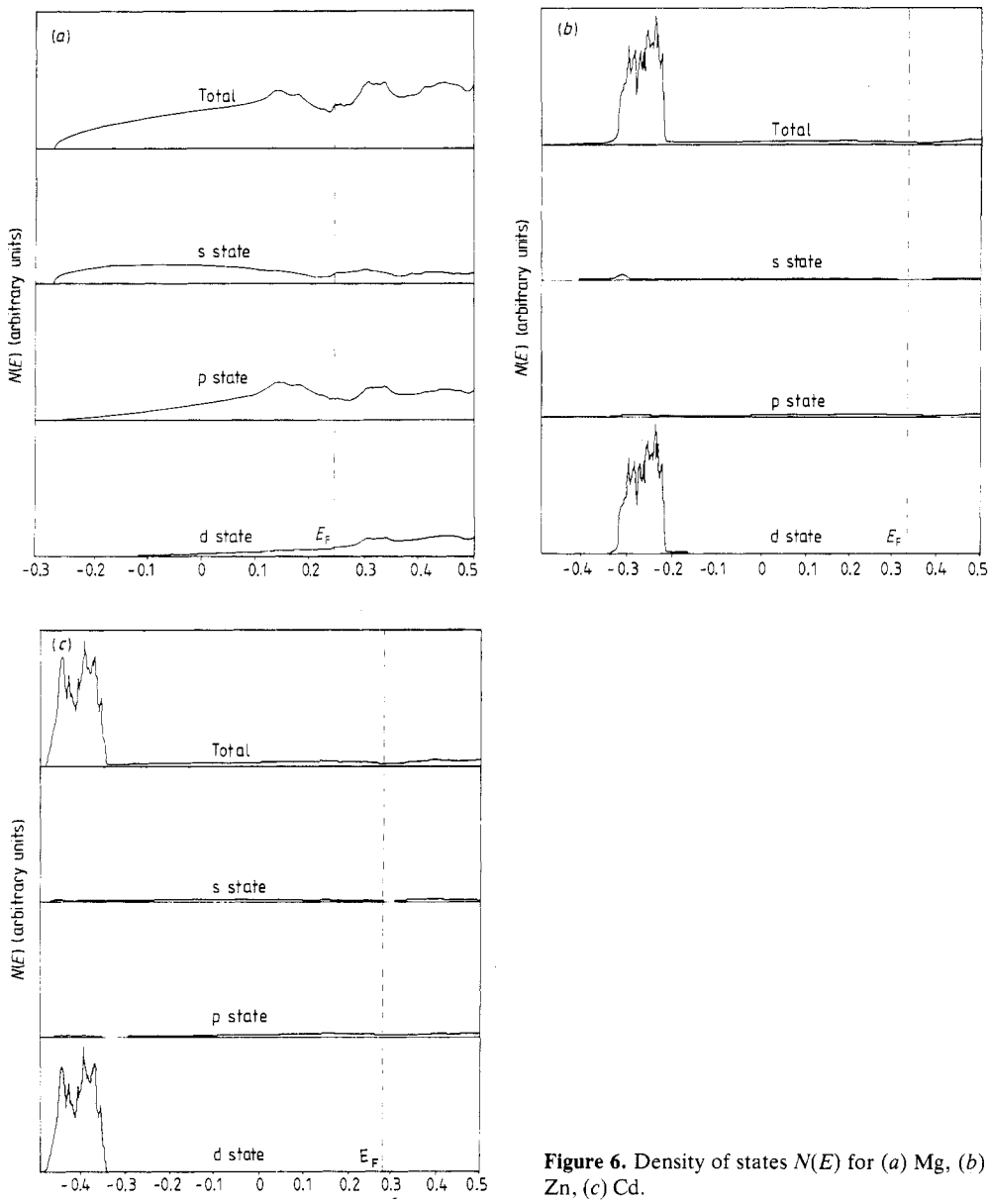

Figure 6. Density of states $N(E)$ for (*a*) Mg, (*b*) Zn, (*c*) Cd.

to those for Zn, i.e. the LMTO method gives more anisotropic FS. The main advantage of our present LMTO calculations is that, contrary to our previous ones, they are self-consistent including non-frozen core states and that the convergence properties concerning the number of k points and l, m convergence are good. This means that our band structure and determination of FS are highly accurate, as long as local density potentials are accepted.

In figure 6 we present partial and total density-of-state (DOS) functions for Mg, Zn and Cd. In the case of Mg the total DOS function below E_F remains a free-electron parabola which is disturbed in the vicinity of E_F by a lattice potential.

A completely different picture may be observed in Zn and Cd. In particular there is a clearly visible narrow contribution to the total DOS function from d states. The corresponding (i.e. total and partial) results of DOS functions for Zn and Cd are similar to each other, and the most important difference is that the d contribution in Cd lies deeper than in Zn.

References

Almond D P, Lea M J and Dobbs E R 1975 *Proc. R. Soc.* A **343** 537
Andersen O K 1975 *Phys. Rev.* B **12** 3060
Asokamani R, Iyakutti K, Rao R S and Devanathan V 1978 *J. Phys. F: Met. Phys.* **8** 2323
Auluck S 1976 *Phys. Status Solidi* b **74** K129
Borghese F and Denti P 1971 *Nuovo Cimento* B **3** 34
—— 1974 *Nuovo Cimento* B **20** 236
Chatterjee S and Sinha P 1975 *J. Phys. F: Met. Phys.* **5** 2089
Cracknell J C 1971 *The Fermi surfaces of metals* (London: Taylor and Francis)
Daniel M R and Mackinnon L 1963 *Phil. Mag.* **8** 537
Daniuk S 1983 *Acta Phys. Pol.* A **63** 633
Dimmock J D 1971 *Solid State Physics* vol. 26 ed. M Ehrenreich *et al* (New York: Academic) p 104
Gibbons D F and Falicov L M 1963 *Phil. Mag.* **8** 177
Harrison W A 1962 *Phys. Rev.* **126** 497
Hedin L, Lundqvist B I and Lundqvist S 1971 *Solid State Commun.* **9** 537
Jarlborg T and Arbman G 1976 *J. Phys. F: Met. Phys.* **6** 189
Jepsen O, Andersen O K and Mackintosh A R 1975 *Phys. Rev.* B **12** 3084
Jones R C, Goodrich R G and Falicov L M 1968 *Phys. Rev.* **174** 672
Joseph A S and Gordon W L 1962 *Phys. Rev.* **126** 489
Juras G E, Segall B and Sommers C B 1972 *Solid State Commun.* **10** 427
Ketterson J B and Stark R W 1967 *Phys. Rev.* **156** 748
Kimball J C, Stark R W and Mueller F M 1967 *Phys. Rev.* **162** 600
Koelling D D and Harmon B N 1977 *J. Phys. C: Solid State Phys.* **10** 3107
Loucks T L 1967 *Augmented Plane Wave Method* (New York: Benjamin)
Mattheiss L F 1964 *Phys. Rev.* **134** A970
Moruzzi V L, Janak J F and Williams A R 1978 *Calculated Electronic Properties of Metals* (London: Pergamon)
Nilsson P O and Lindau I J 1971 *Phys. Rev.* **171** 743
Slater J C 1965 *Quantum Theory of Molecules and Solids* vol. 2 (New York: McGraw-Hill)
Skriver H L 1984 *The LMTO Method* (Berlin: Springer)
Stark R W 1967 *Phys. Rev.* **162** 589
Stark R W and Falicov L M 1967 *Phys. Rev. Lett.* **19** 795
Steenhaut O L and Goodrich R G 1970 *Phys. Rev.* B **1** 4511
Trivisonno J and Stark R W 1978 *J. Low Temp. Phys.* **32** 725